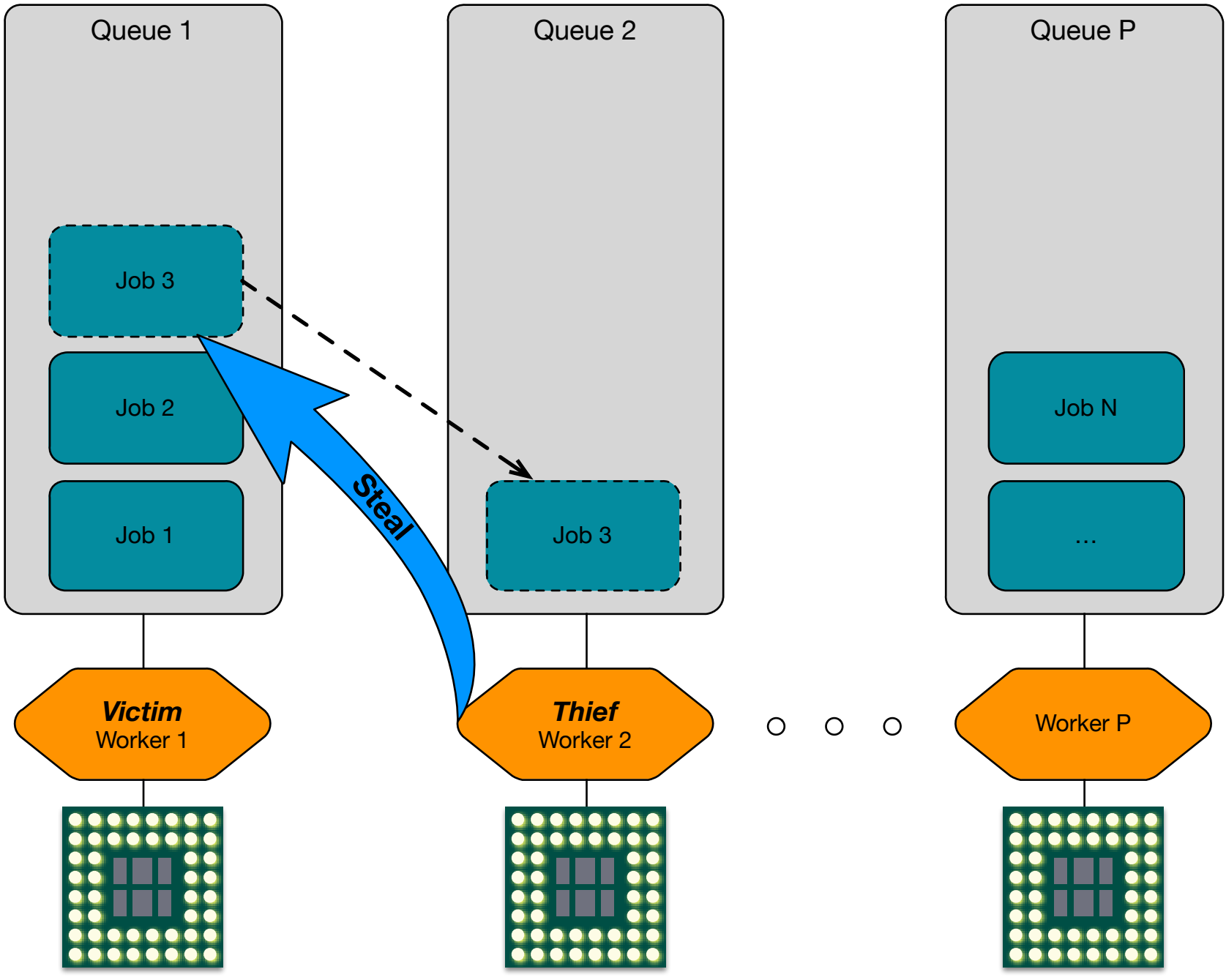
Queue 1
Queue 2
Queue P
Job 3
Job 2
Job 1
Job 3
Job N
...
Steal
Victim
Worker 1
Thief
Worker 2
Worker P